PLUMBING ACCESSORIES & FIXTURES

40MM BOTTLE TRAP

SPECIFICATIONS

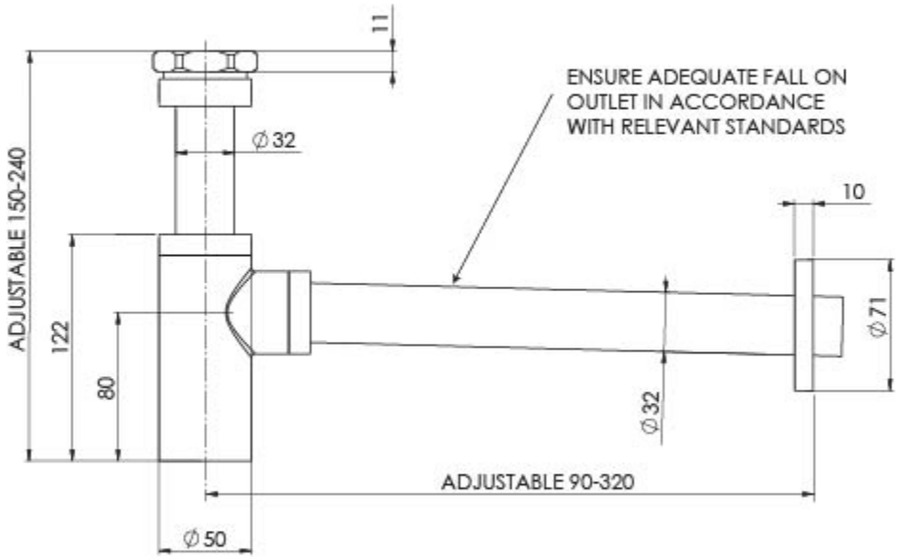

AVAILABLE IN

800-8950-00
Chrome

800-8950-40
Brushed Nickel

800-8950-30
Gun Metal

800-8950-10
Matte Black

800-8950-12
Brushed Gold

INFORMATION

WATER RATING
www.waterrating.gov.au
N/A
Licence No. 0133

MAINTENANCE AND CARE:

- All surfaces should be cleaned with mild liquid detergent or soap and water.
- Do not use cream cleaners or citrus based cleaning products, as they are abrasive.
- Use of unsuitable cleaning agents may damage the surface.
- Any damage caused in this way will not be covered by warranty.

Please visit https://www.phoenixtapware.com.au/warranty to view the full warranty

PHOENIX
TAPWARE, SHOWERS & ACCESSORIES

While we aim to ensure the specifications shown are correct at time of printing, Phoenix Tapware reserves the right to make modifications without prior notice. Always use the physical product measurements for mark-ups and roughing-in as the line drawing shown may differ from the actual product over time. All measurements are shown in millimetres. Colours may vary from image shown.

Ph: +61 3 9780 4200
22/09/2020
phoenixtapware.com.au