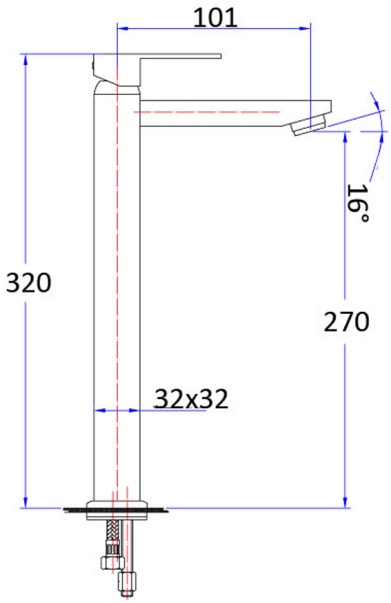

SUTTOR HIGH RISE BASIN MIXER 552468

FINISH: Chrome
WORKING PRESSURES: 150-500kpa
OPERATING TEMPERATURE: 1°C to 70°C
WELS: 5 STAR 6L PER MIN
CARTRIDGE TYPE: 25mm Cartridge

WARRANTY:
8 year Ceramic disk cartridges-parts only
Note: Excludes damage to ceramic disk cartridges from pieces of copper tube, plastic tube, sand, dirt or thread tape etc.
3 year replacement products or parts
1 year replacement products or parts and labour

FOR MORE INFORMATION VISIT
www.aclco.com.au

EMAIL: sales@aclcompany.com.au **Website:** www.aclco.com.au **Tel:** 02 9647 1383